MINIATURE COAX THREADED 40/240 SERIES, TNC BULKHEAD JACKS

BJ41 Shown

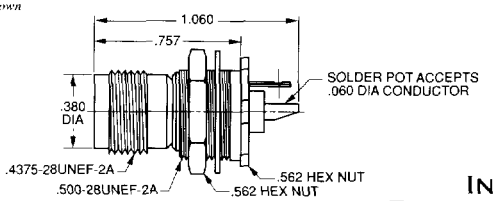

INSULATED BULKHEAD JACK

REAR MOUNT, SOLDER POT

50Ω **BJ41**

75Ω **UBJ41**

Mounting Hole: D3.147

BJ40 Shown

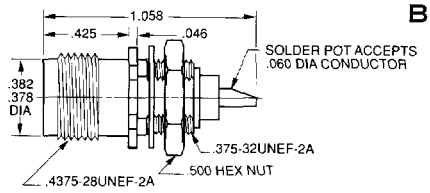

BULKHEAD JACK

SOLDER POT

50Ω **BJ40**

75Ω **UBJ40**

W/ SOLDER LUG

50Ω **BJ40SL**

75Ω **UBJ40SL**

Mounting Hole: D5.125

BJ47 Shown

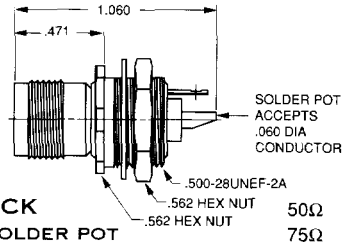

INSULATED BULKHEAD JACK

FRONT MOUNT, SOLDER POT

Mounting Hole: D3.147

50Ω **BJ47**

75Ω **UBJ47**

BJ46-1 Shown

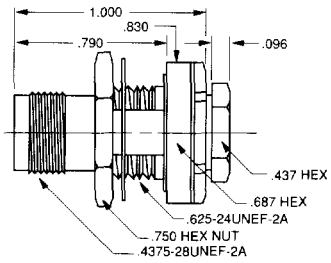

INSULATED BULKHEAD JACK

REAR MOUNT, WRENCH CRIMP

50Ω **BJ46-**△1

75Ω **UBJ46-**△1

Mounting Hole: D2.187

GF-Ground filter version page 31.

BJ49-1 Shown

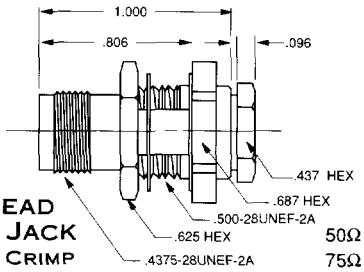

BULKHEAD CABLE JACK

WRENCH CRIMP

50Ω **BJ49-**△1

75Ω **UBJ49-**△1

Mounting Hole: D3.218 / D2.218 (Cable Groups 6, 6E,51,52)

BJ246-001 Shown

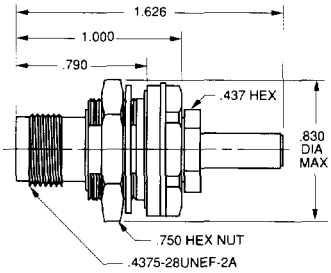

INSULATED BULKHEAD JACK

REAR MOUNT, TOOL CRIMP

50Ω **BJ246-**△1

75Ω **UBJ246-**△1

Mounting Hole: D2.187

GF-Ground filter version pg 31.

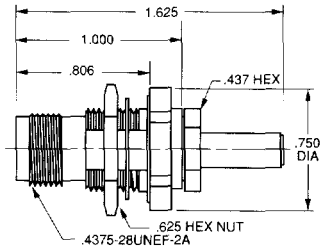

BULKHEAD CABLE JACK

TOOL CRIMP

50Ω **BJ249-**△1

Mounting Hole: D3.218

D2.218 (Cable Groups 6,6E,51,52)

CBBJR46 Shown

MODEL NO.	LTR CODE	OHM	A DIM	B DIM	C DIM	D DIM	E DIM
CBBJR46	-	50	.046	.24	.090	.050	.0625
UCBBJR46	-	75	.029	.24	.090	.050	.0625
CBBJR46A	A	50	.046	.34	.090	.058	.070
UCBBJR46A	A	75	.029	.34	.090	.058	.070

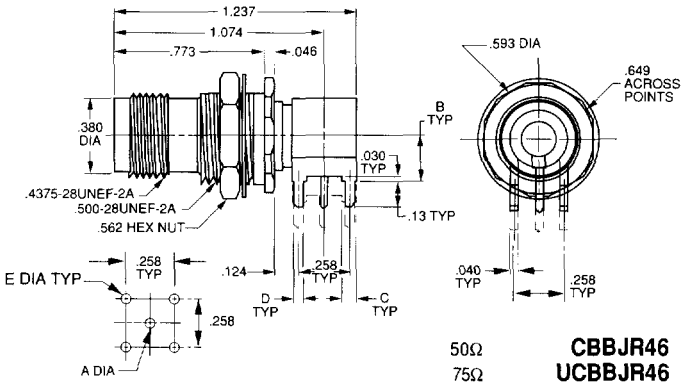

INSULATED CIRCUIT BOARD JACK

RIGHT ANGLE

"A" refers to tall versions

50Ω **CBBJR46**

75Ω **UCBBJR46**

50Ω **CBBJR46A**

75Ω **UCBBJR46A**

Mounting Hole: D3.156

MODEL NO.	LTR CODE	OHM	A DIM	B DIM	C DIM	D DIM	E DIM
CBBJR49	-	50	.046	.24	.090	.050	.0625
UCBBJR49	-	75	.029	.24	.090	.050	.0625
CBBJR49A	A	50	.046	.34	.090	.058	.070
UCBBJR49A	A	75	.029	.34	.090	.058	.070

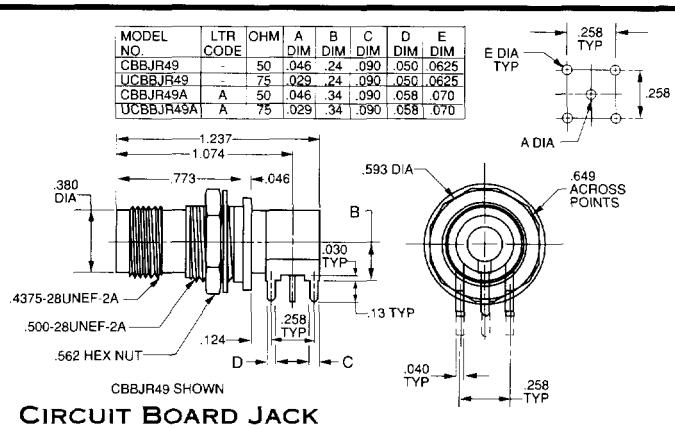

CBBJR49 SHOWN

CIRCUIT BOARD JACK

BULKHEAD MOUNT

RIGHT ANGLE

Add "A" for tall versions

50Ω **CBBJR49**

75Ω **UCBBJR49**

Mounting Hole: D3.230

△1 - *Refers to Cable Group Table, see pages 68-88. "D" mounting holes are on page 45.*